Concerto Rondo 12

25°

IN-GROUND

Specifications

Housing material	Stainless steel
Surface finish	Powder coat on request
Cover material	Acrylic | Glass
LED type	Cree XP-G3
Lifetime fixture	30 years
Voltage	230 V
CRI	≥ 80
Dimmable	None | DALI | 1-10V
Future proof	Yes
Net efficiency	130 Lumen/Watt
Max light output	2700 lm
Lens	25°

CE IP67 IK16

These specifications can be customized on request, please contact us for more information

Dimensions

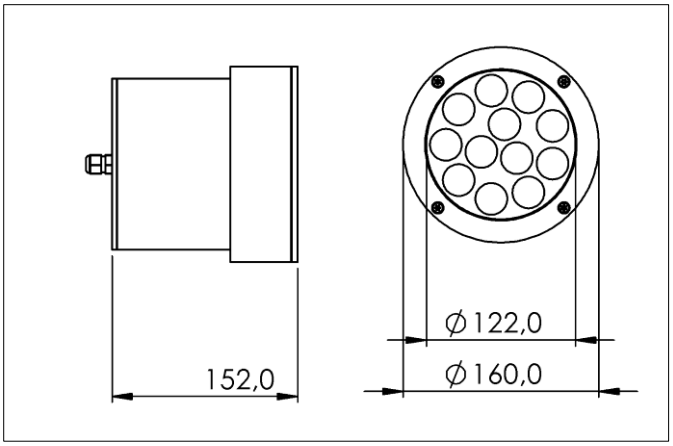

Light characteristics

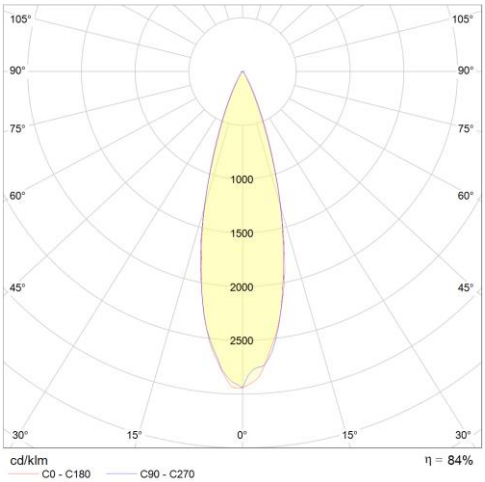

Netwerk 125
1446 WV, Purmerend

T: +31 229 472011
E: info@lightinternational.nl